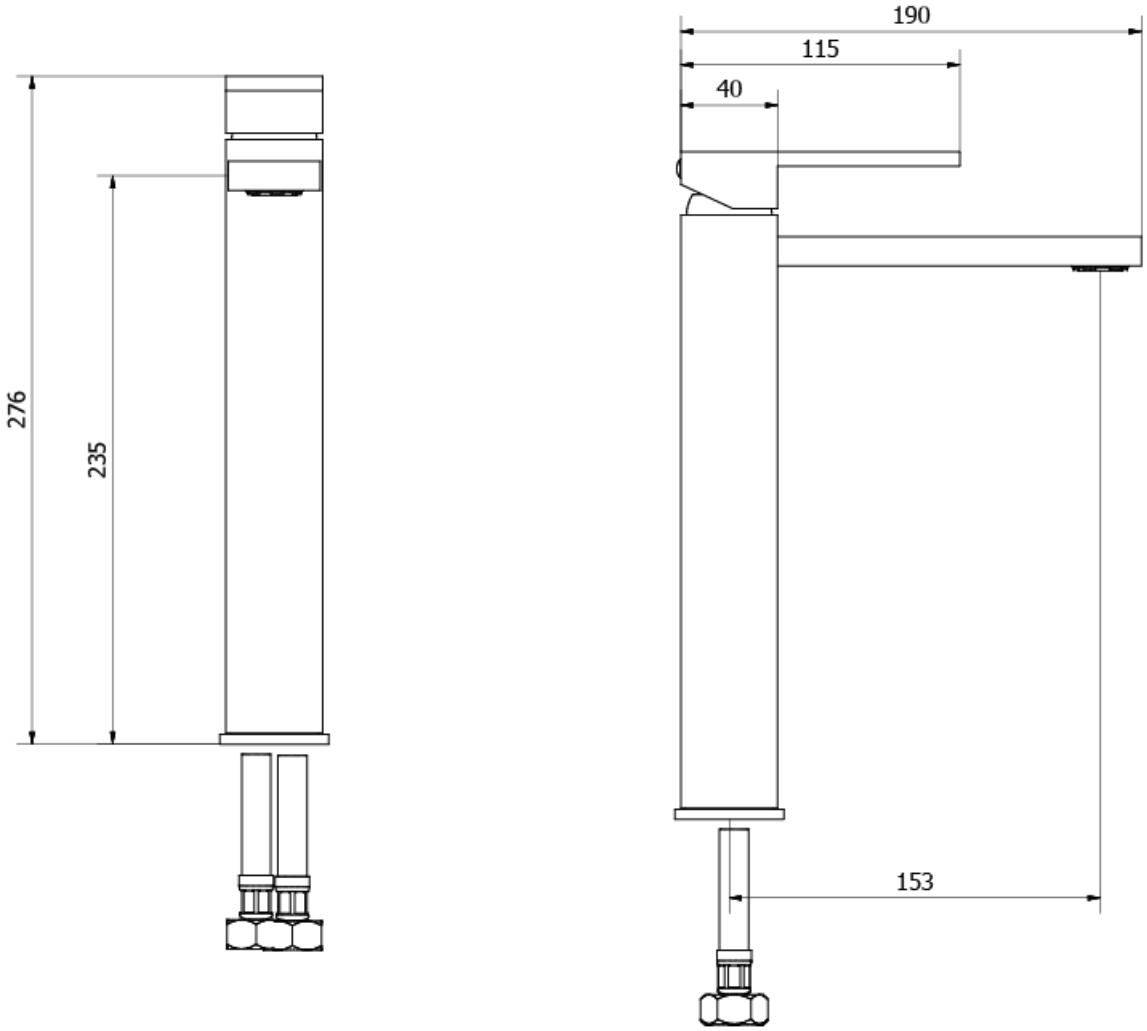

ZN112DNC - DIMENSION DRAWING